60x15cm Warming Drawer
Heritage Series

WD60HERA

The Heritage Series 60x15 warming drawer offers a large 25kg capacity. The large drawer space heats to a consistent temperature range between 30-85°C to keep dishes at serving temperature. The drawer has a soft- motion push/pull action with full extension glides. Available in Matt Black and Ivory.

Guarda online

Specifications

Features

Compact oven features	
Size	60x15 cm
Design	stainless steel
Controls	push/pull with soft motion operation
Equipment	inner rubber matt / thermostat light on/off
Carring capacity	25 kg
Max temperature	85°C

Technical specifications	
Voltage and frequency	220/240 V - 50/60 Hz
Absorbed power (W)	400 W
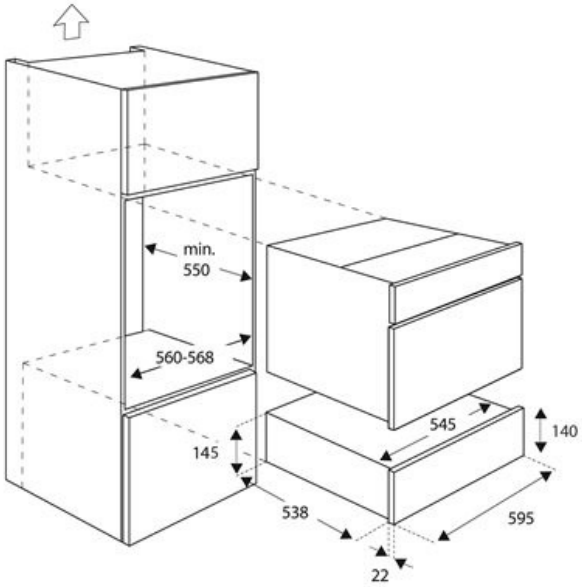
Dimensions